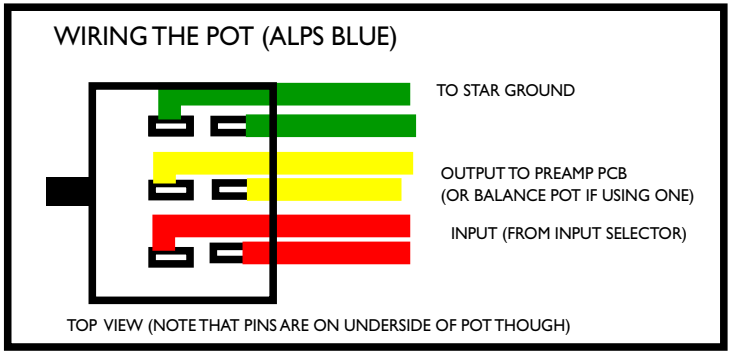
WIRING THE POT (ALPS BLUE)
TO STAR GROUND
OUTPUT TO PREAMP PCB
(OR BALANCE POT IF USING ONE)
INPUT (FROM INPUT SELECTOR)
TOP VIEW (NOTE THAT PINS ARE ON UNDERSIDE OF POT THOUGH)

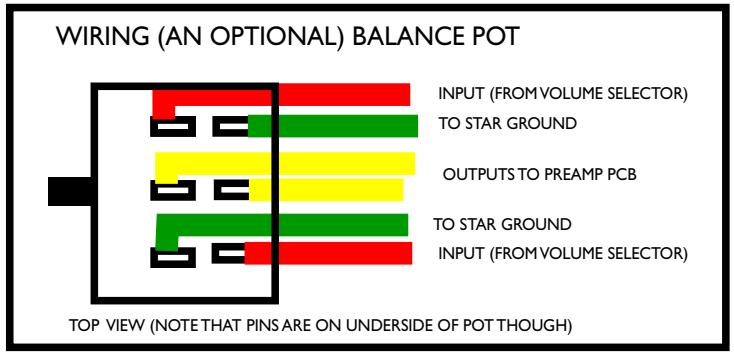
WIRING (AN OPTIONAL) BALANCE POT
INPUT (FROM VOLUME SELECTOR)
TO STAR GROUND
OUTPUTS TO PREAMP PCB
TO STAR GROUND
INPUT (FROM VOLUME SELECTOR)
TOP VIEW (NOTE THAT PINS ARE ON UNDERSIDE OF POT THOUGH)

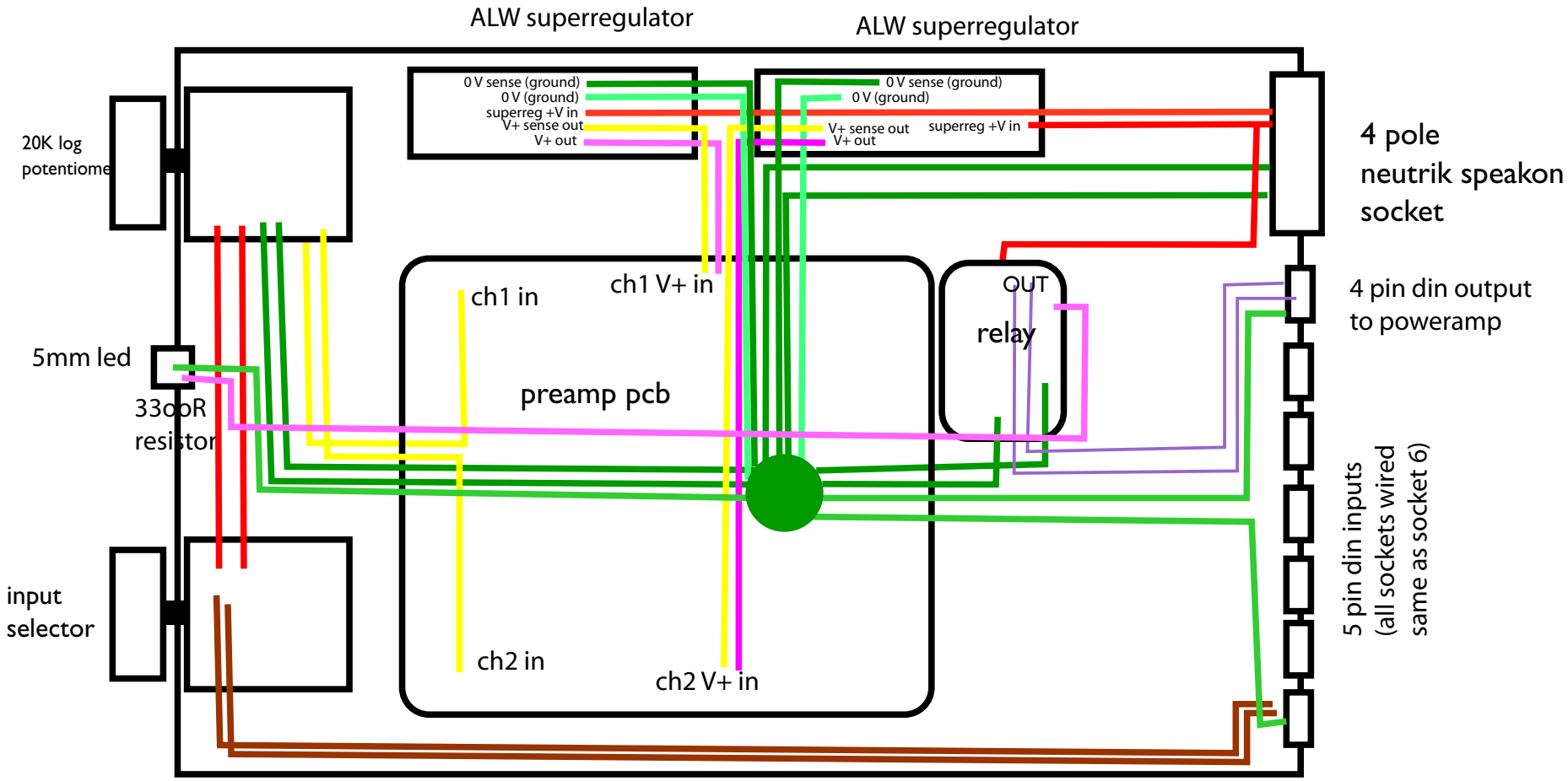
ALW superregulator
ALW superregulator
0 V sense (ground)
0 V (ground)
superreg +V in
V+ sense out
V+ out
0 V sense (ground)
0 V (ground)
V+ sense out
V+ out
superreg +V in
20K log
potentiome
4 pole
neutrik speakon
socket
ch1 in
ch1 V+ in
OUT
relay
4 pin din output
to poweramp
5mm led
preamp pcb
330oR
resistor
5 pin din inputs
(all sockets wired
same as socket 6)
input
selector
ch2 in
ch2 V+ in